REVISIONS				
ZONE	REV.	DESCRIPTION	DATE	APPROVED
---	A	APPROVED	02/27/2019	MW
---	B	ADDED USBL KIT	09/28/2020	MW
---	C	ADDED REAR FACING CAMERA KIT	11/11/2022	MW

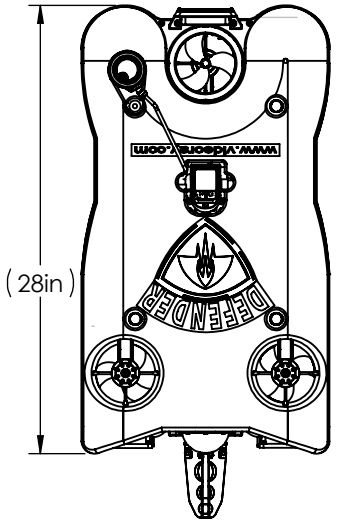

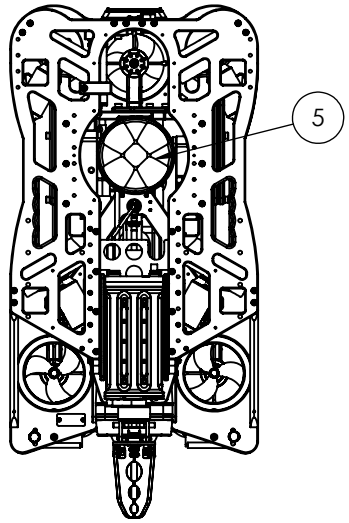

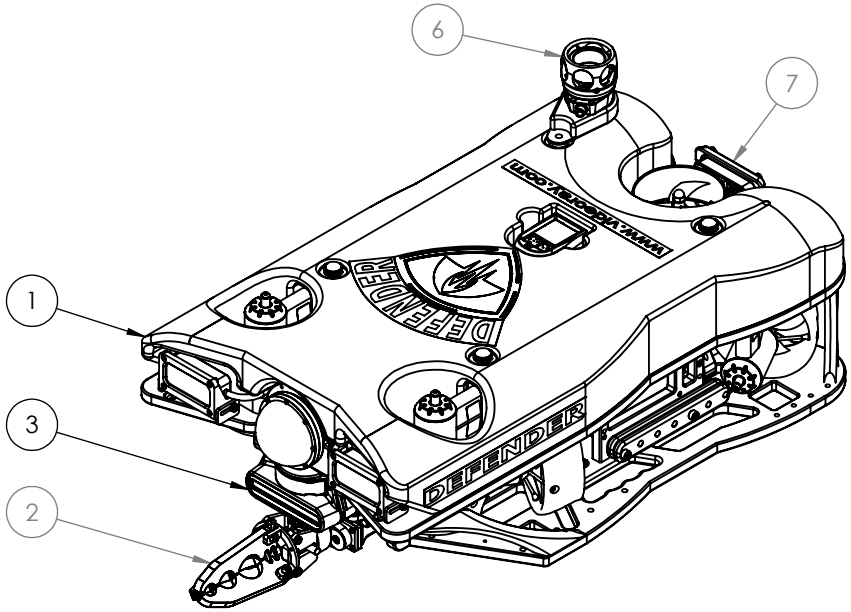

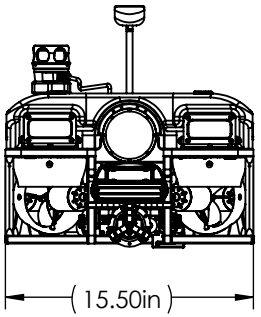

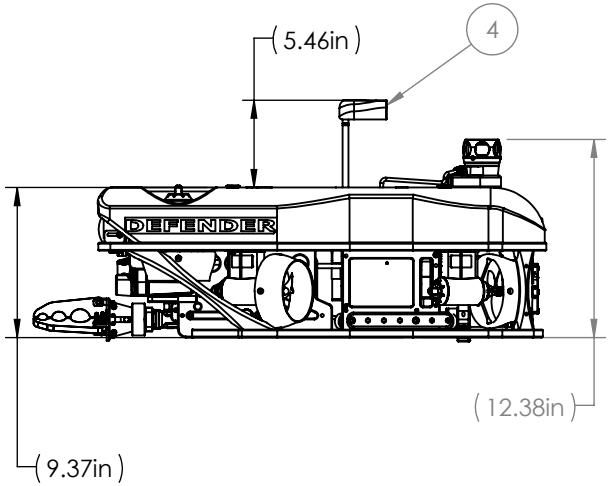

ITEM NO.	PART NUMBER	DESCRIPTION	QTY.
1	70844	MSS Defender Vehicle No Payload	1
2	70824	MSS ROTATING MANIP INTEGRATION KIT	1
3	71047	MSS DEFENDER KIT OCULUS SONAR, 750d	1
4	71046	MSS DEFENDER KIT GPS SYSTEM	1
5	71044	MSS DEFENDER KIT NORTEK DVL 300M	1
6	71162	MSS Defender Kit Blueprint USBL System	1
7	73234	Defender Rear Facing Camera Kit	1

VideoRay
212 East High Street, Pottstown, PA 19464
USATel: +1 610-458-3000 FAX: +1 610-458-3010
www.videoray.com

TITLE:	MSS Defender Vehicle						
PART NO:	70743						
DRN:	MW	7/3/2018	MATERIAL:				
CHK:	JV	9/28/2018	SHEET TITLE:	Sheet1	CAGE CODE: 1WC35	WEIGHT:	
APP:	MW	2/22/2019	REV: C	STATUS: PRODUCTION	SIZE: A	SHEET:	1 OF 1

THIRD ANGLE

Notice of Proprietary Information
The information contained in this drawing is the sole property of VideoRay, LLC. Any reproduction in part or as a whole without the written permission of VideoRay, LLC is prohibited.

PLOT DATE: 11/28/2022 2:31:47 PM